CODE	DESCRIPTION	POS.	GR.
281205B72	INFERIOR BASIS	1	
279309A72	FRONT WHEEL DIAMETER.35	2	
256764A	SHAFT FOR FRONT WHEEL	3	
276051A	TERMINAL BOX	4	
K210001800A	SOURCE CABLE 3X1	5	
K210008800B	COMPRESSOR RUNNING CAPACITOR 8MF/45	6	
K100027600A	PRESSING PIPE	7	
K100027700A	OUTLET EVAPORATOR PIPE	8	
K100019100A	SILENCER PIPE+FILTER+CAPILLARY	9	
K070004298A	CONDENSE CONTAINER	10	
281148A69	BUOY	11	
281249A72	BUOY MOUNT	12	
L200000200A	SECCOPUR ELECTRONIC PARTS GROUP	13	
K200000300A	EVAPORATOR TEMP.PROBE	14	
K200000500A	TEMP.\HUM SENSOR BOARD	15	
281242B137	BONNET	16	
281243A137	BACK	17	
K070004480A	AIR INDUCTION GRILL	18	
K070004596A	AIR INDUCTION FILTER	19	
K070004696A	BASKET FOR ACTIVED CARBONS FILTER	20	
K070004700A	ACTIVED CARBONS FILTER	21	
281245C72	CENTRAL SUPPORT	22	
281246B72	CONDENSE TANK	23	
272136A	EPS SCROLL	24	
272137B	TOP INSULATOR	25	
K100027500A	PRESSING PIPE	26	
276046A	4 POLE MOTOR 6/33 WATT	27	
K060000796A	CENTRIFUGAL SUCTION FAN D.160X50	28	
L300001400A	COMPRESSOR GROUPWARE	29	
L020010900A	COMPRESSOR WIRING FOR SECCOPUR HITA	34	
276009A	MICROSWITCH	35	
281247A72	MICRO-SWITCH SUPPORT	36	
K160005800A	GENERAL WIRING SECCOPUR S	37	
K170025400A	SECCOPUR S MARK STICKER	38	
K170005200A	OLIMPIA BRAND WHITE STICKER	39	
J140004600A	CLIP FOR HOLE D.6.6	40	
G0410A	SECCOPUR CONTROL BOARD ASSY	42	
G0411A	SECCOPUR POWER BOARD ASSY	43	
G0367A	GR.DEW CONTINUE DRAINING	44	
281502A	VIBRATION DUMPING FOR COMPRESSOR	45	
L020011000A	ENSEMBLE COILS	46	
G0477A	GR.BSA586CV COMPR.ACCESSORIES	47	
K200000400A	POWER BOARD	48	
K160002100A	TANK MICROSWITCH CABLE	49	
L010002500A	WATER CONTAINER GR.	51	

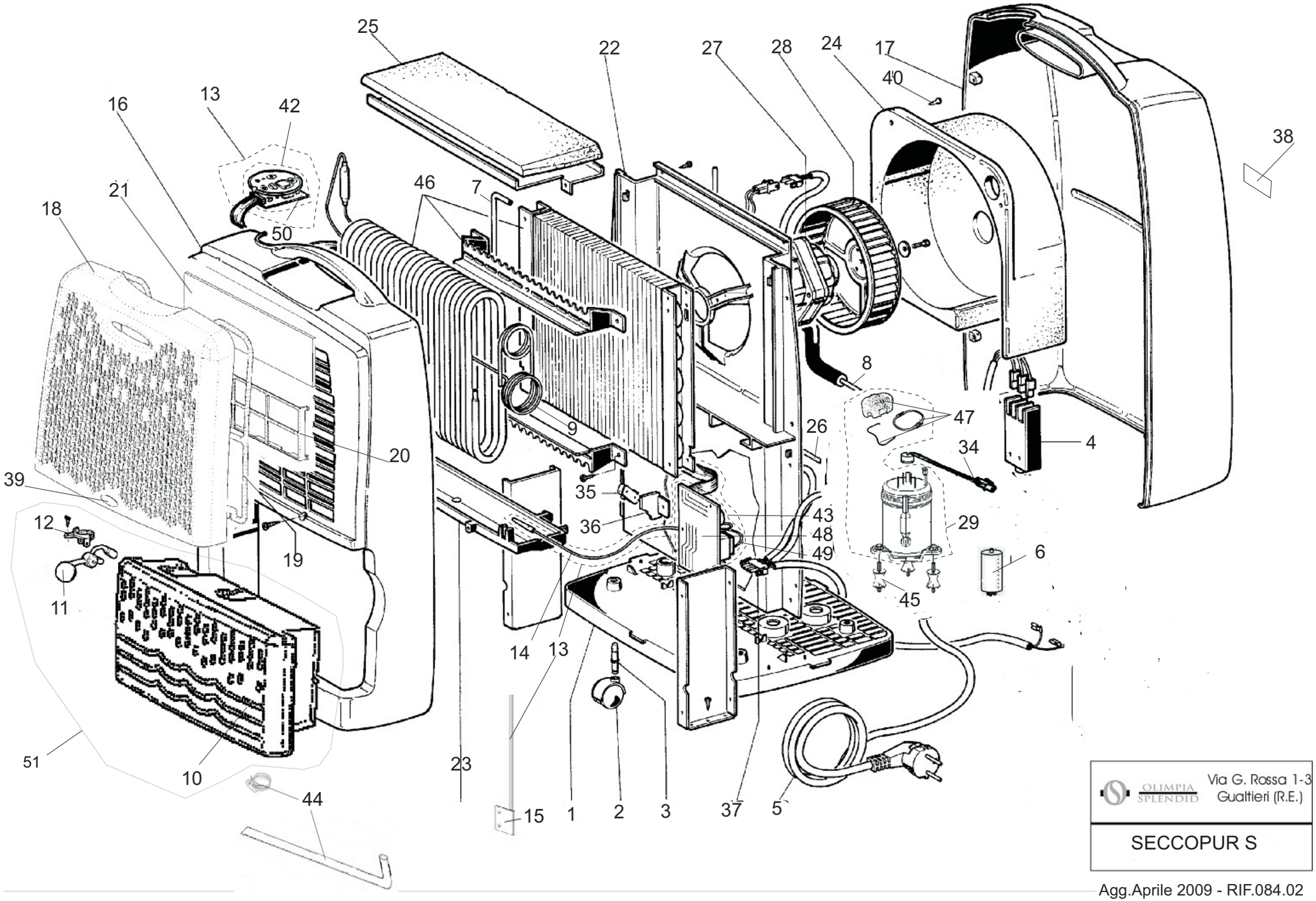

OLIMPIA SPLENDID
Via G. Rossa 1-3
Gualtieri (R.E.)

SECCOPUR S

Agg.Aprile 2009 - RIF.084.02